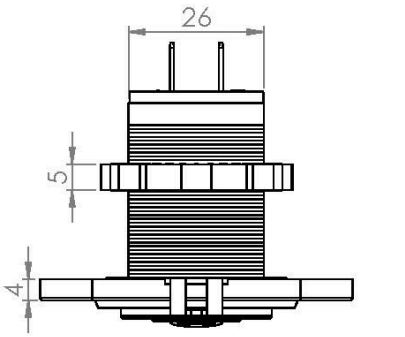

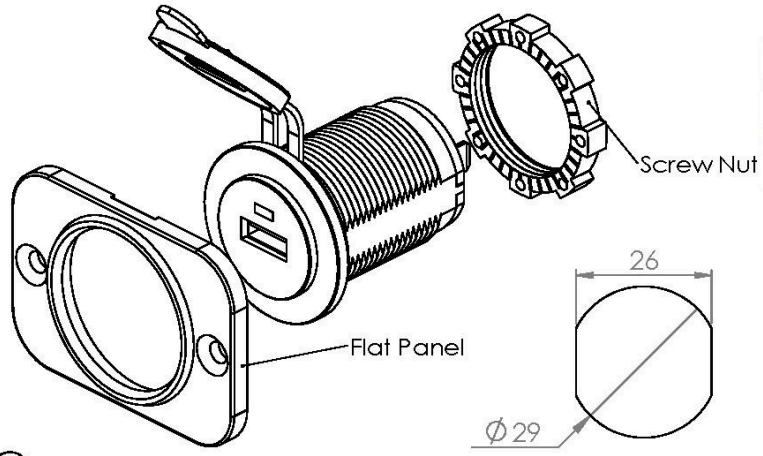

PANEL CUT OUT

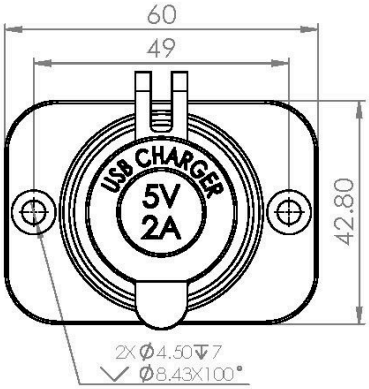

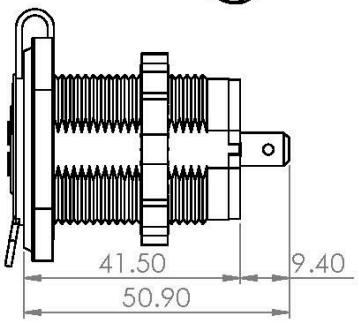

- Optimized for iPad, iPhone, iPod - fast charging at full speed (2.1A for iPad, 1A for iPhone/iPod)
- Compatible with other smartphones
- Input: DC 12V
- Output: DC 5V 2.1A
- Short circuit / overheat protection
- 0.250" Quick Connect Terminals
- LED power indication
- Water-resistant rubber cap (IP66 when not in use)
- Flame retardant Nylon (glass fiber reinforced) enclosure

Modify	Date	Revision		Approval	No.

Size	0.5-6	>6-30	>30-120	>120-400
Tol	+/-0.05	+/-0.1	+/-0.15	+/-0.2

Item#	AS231A-A			Part#				Rev.	0
Title	2A USB Charger with Flat Panel			Part				Unit	m/m
Mat'l				Finish				Ratio	1:1
Auth	Matt	CHK	Matt	DWG	Derek	Date	2013.03.05	Proj.	3rd